Commission for Energy Regulation

An Coimisiún um Rialáil Fuinnimh

# Briefing Note on the Proposed Market Arrangements in Electricity (MAE)

## Prepared by the Commission for Energy Regulation (CER)

**CER/03/181**

# 1. Introduction

The purpose of this briefing note is to explain, at a high level, some of the key features of the proposed Irish electricity market.

The Irish electricity market will bring real market forces to bear in the electricity industry to improve efficiency, reduce the need for government/regulatory intervention and investment, and conform to the EU directives.

The benefits of the proposed electricity market in Ireland include:

- Efficiency of production and delivery of efficient prices – short term, medium and long term
- facilitation of an all-Ireland market
- encouragement of demand side management
- facilitatation & promotion of renewables
- contribution to Kyoto objectives

The primary driver of these benefits is the price of electricity. Electricity prices under the proposed new market will:

- be transparent and available to all participants and observers
- properly reflect underlying supply and demand
- provide short-term (ie, half-hourly) signals and incentives for efficient behaviour of all participants
- attract new entry when appropriate (ie, when supply is short)
- provide strong locational signals to generators through locational marginal pricing
- be a single uniform price for customers

The following two sections of this note will expand on the benefits of the proposed market and how price drives these benefits.

## 1.1 Extensive Consultation with Industry & Market Participants

The Commission consulted extensively during the development of MAE. In recognition of the divergent views and interests of stakeholders in the trading review, the Commission, at the outset of the review, developed a Stakeholder Management Plan. This plan identified the stakeholders in the industry from participants, customers and government and a plan was developed for communicating and assimilating views regarding the most appropriate market for Ireland.

The CER operated an 'open door' policy in relation to these stakeholders wishing to comment on any element of the review. The consultation process began in November 2002 and consisted of consultation papers, public fora, workshops and tutorials. A number of presentations were made to key players in the industry including the Internal Market in Electricity (IME) group in Northern Ireland, the Irish Wind Energy Association, and the Department of Communications, the Marine & Natural Resources. All relevant documentation is available on the CER website, **www.cer.ie**.

## 2. Benefits of the Market Arrangements in Electricity (MAE)

Overall, the MAE is well suited to the size and composition of the Irish market. It is consistent with EU directives and creates the right incentives to reduce costs. In addition, the MAE will promote the conditions that favour new generation entry.

Specific benefits of the new trading arrangements include:

### 2.1 Efficiency

- Short-term – more efficient dispatch of existing generators, improvements in the availability and efficiency of existing power plants, and changes in the behaviour of customers
- Medium term – some investment in modifications of existing power plants to further improve availability, increase operating flexibility, and increase output levels; some investment in metering and customer loads to allow more flexible operation in response to price signals
- Long term – efficient and economically efficient investment in transmission lines and power plants, in terms of capital cost, size, fuel type and location.

### 2.2 Facilititation of an All-Island Market

By considering Northern Ireland as a separate zone, the market can continue to operate as at present i.e. where there are separate markets in both jurisdictions. In addition, Locational Marginal Pricing (LMP) will permit seamless integration with the Northern Irish market at any time in the future.

### 2.3 Encouragement of Demand-Side Management

Demand-side participation will be inherently encouraged under the proposed new arrangements. It will be to suppliers' advantage to ask some of their larger customers, based on prior agreements, to turn down at peak demand periods in order to avoid buying higher priced electricity from the market at these times.

### 2.4 Facilitation & Promotion of Renewables

There is a guaranteed market for the output of generators i.e. generators can enter the market without having a contract with a supplier. There is no requirement for a half-hour balanced schedule. This will ensure, in particular, that wind generators will not be disadvantaged due to the inherent variability of wind generation. Prices will be high in this market at times of peak demand and renewables will get these prices if they are generating.

### 2.5 Contributes to Kyoto Objectives

On the generator side, the optimum dispatch, derived from the Market Clearing Engine proposed, means that the most efficient use is being made of resources and this will contribute to minimising emission levels. On the supplier and customer side, there are inherent demand-side incentives in the market which will encourage energy efficiency and thereby reduce emission levels. All these features provide a favourable environment for the encouragement of renewable generation.

## 3. Proposed Electricity Pricing in Ireland

### 3.1 All electricity to be bought and sold at the marginal price

The Irish electricity market proposed is a mandatory centralised pool, which means that all power is sold to and bought from a central marketplace, the spot market. The System and Market Operator (SMO) will administer the spot market, which will be EirGrid.

The market will be an 'electricity only' market which means that generators will be paid for energy provided but no separate payments will be made for capacity, it is implicitly paid for in the single price (implicit capacity payment).

Generators make offers to the SMO to produce a quantity of electricity at a price for each half hour of every day. In the absence of transmission system constraints, the spot market price for all electricity is the price of the final offer required to meet demand (i.e. the marginal price). All generators receive this price and all suppliers pay the price. When there is congestion (i.e. when there are constraints in the transmission system)[1], the price for each generator is the marginal price at its location on the grid, which could be different from other locations.

***Diagram of Marginal Pricing***

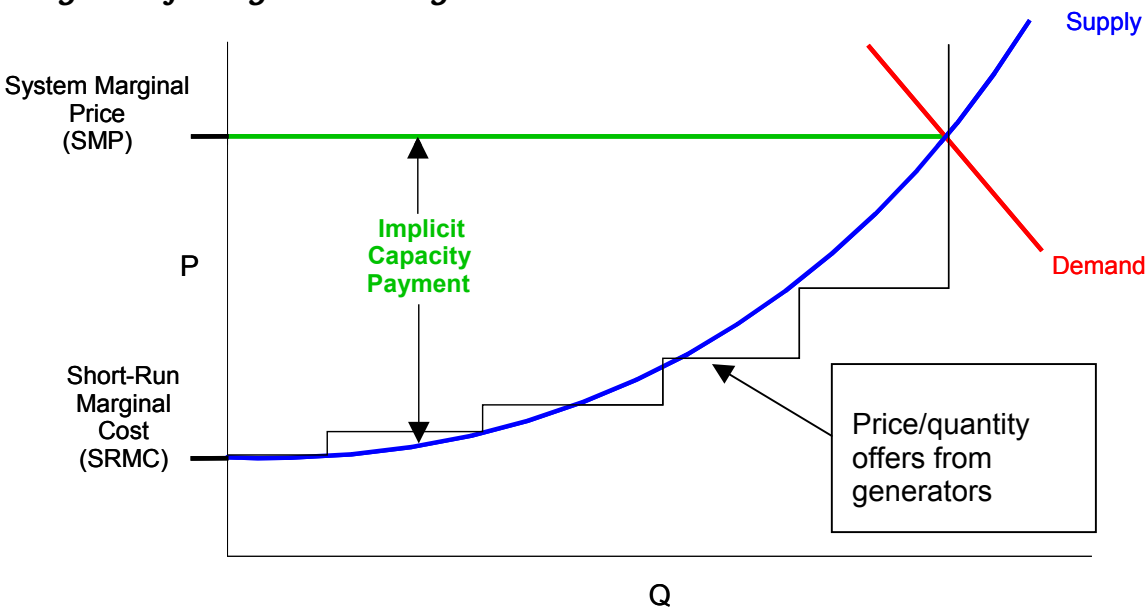


### 3.2 Locational Pricing will be used to manage the system

Locational Marginal Pricing (LMP) is a transparent method, used in many electricity markets around the world that allows market prices and system operation to be resolved simultaneously.

This LMP approach produces marginal prices that will differ on a locational basis when congestion is present, but produces prices that are similar across locations when there is no congestion (any differences arise from losses). This approach develops price signals to generators that direct short-term operation of existing plant and provide incentives for investment in new power plants.

---

[1] For example, a transmission constraint could consist of the thermal limit of a transmission line or the requirement for additional voltage support.

Locational pricing results in investments in the most advantageous areas and reduces the total cost of electricity production. These locational prices will also provide useful information to aid in efficient transmission system expansion.

### 3.2.1 More detail on LMP through examples

Like most products, electricity is produced in one location and sold in another. Unlike most products, storage or stock piling opportunities are extremely limited, and almost all electricity production is delivered to customers in real time using the transmission and distribution network. The electricity network is also prone to losses and congestion.

### 3.2.2 Operation when the network is uncongested

In the following example the line is not congested and the marginal cost of electricity at both nodes is the cost of production of Generating Company C (Genco C). The price at Node 1 automatically takes account of losses.

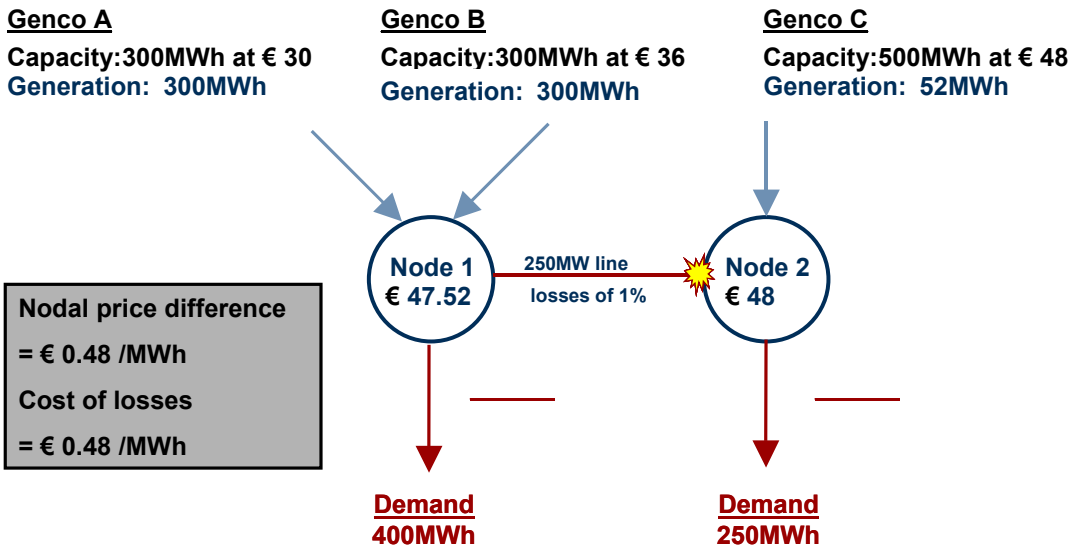


### 3.2.3 Operation when network is congested

The network may become congested (either by load levels or outages of power plants or transmission lines) and therefore, not able to transport the same amount of electricity as an uncongested network.

This means that cheaper power stations cannot deliver their power to where it is needed and these stations will have their output reduced (in the example below Genco B). In order to meet the remaining demand, a more expensive power plant (Genco C below) has its output raised. Both generators are paid for the electricity delivered and no more (ie, no constrained on or off payments are needed).

The configuration of power plants shown below is a result of the transmission system and would result no matter what pricing method is chosen. The LMP approach allows simultaneous pricing and congestion management, with the resulting prices varying by location to reflect congestion.

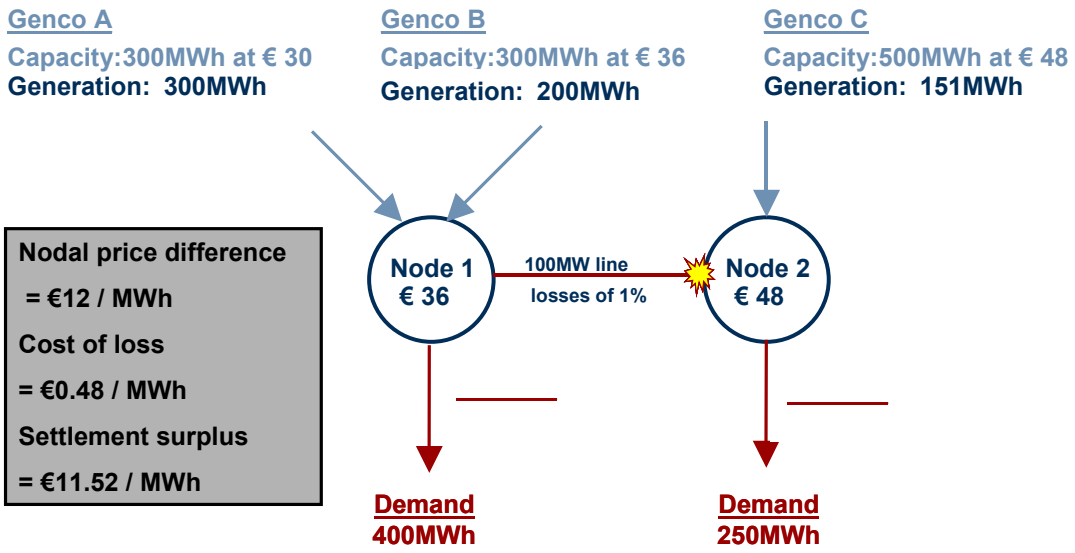


If the pattern in the example were repeated over time, there would be no sense in a new generator with an efficient plant locating at Node 1 where the price is lower and where there is already an excess of cheap power that isn't used when there is congestion. The new generator would locate at Node 2 where the power is needed and where prices are consistently higher.

This would have the result of lowering the overall market price, a result that is not necessarily true using alternative pricing mechanisms.

An **all-island market** can be easily facilitated by this locational pricing approach. The most likely way to do this is to have a single all-island market and system operator developing a single set of locational marginal prices for generators, while the uniform average price for consumers could be developed separately for the North and for the South.

### 3.3 Suppliers will pay the same price at all locations

Locational prices will be calculated by the SMO and generators will sell at the locational marginal price at their location. As customers are less likely to make locational decisions than generators based upon electricity prices, a pragmatic approach will be adopted to average customer locational prices into a single **Uniform Customer Price** that will apply to all suppliers. Suppliers will pay this uniform price for all of their demand. Therefore final customers will not be exposed to the locational aspect of the price.

### 3.4 Price changes over time can be hedged between participants

Spot prices will vary over time, rising and falling. Spot prices will be high when demand is high and low when demand is low, with prices changing over a day and over the seasons. This should accurately reflect the marginal value of electricity over time.

This is extremely important because it sends powerful signals to customers to reduce demand at peak times and also signals to generators the types of plant that they should build. For example if prices are generally low but with occasional higher priced peaks then it may be most advantageous to build peaking generating plant that only operates at the high priced times.

The variations in prices over time can be hedged with financial contracts between participants, the most common version being the Contract for

Difference (CfD). These are a tried and tested method for reducing the effects of price volatility, but not the important volatility itself. The contracts ensure that generator and supplier cash flows remain sufficiently even to maintain financial viability but without removing the incentives to adapt behaviour to price signals. CfDs also allow suppliers and generators to contract over extended periods of time, thus they are extremely useful in encouraging new entry in both generation and supply.

CfDs may be imposed upon ESB Power Generation and even ESB Public Energy Supply in order to moderate the effects of market dominance.

### 3.5 The risk of locational price differences is managed with FTRs

Since generators are paid the locational marginal price while suppliers pay the uniform customer price, one of these two groups will face some price risks, even if fully hedged with CfDs, as discussed immediately above.

The proposed market design will provide Financial Transmission Rights (FTR) instruments to hedge this locational price risk between the generator locational marginal prices and the uniform price.[2]

### 3.6 Operating reserves markets can be integrated with the electricity market to reduce costs

Reserves and other ancillary services are needed to maintain a reliable electricity system in the short term. Generators will be able to offer power to the spot market and to offer reserves. The SMO will procure reserves and ancillary services and will implement a spot market for these services.

The SMO will then be able to coordinate the electricity spot market and the reserves market. Other countries that have adopted this approach have seen significant savings on reserve costs of up to 80%.

---

[2] FTRs are funded by the settlement surplus. If there is congestion the total revenue from the suppliers will be greater than the total amount paid to generators, the difference minus the cost of losses is the settlement surplus. The holder of the FTR will get a proportion of the settlement surplus appropriate to the contract they hold. The FTRs may be sold, distributed or a mixture of both.